EnviroInfo 2007 (Warschau)
Environmental Informatics and Systems Research
 ISBN: 978-3-8322-6397-3

Integration of Risk-Oriented Environmental Management Information Systems and Resource Planning Systems

Burkhardt Funk[1], Andreas Möller[1], Peter Niemeyer[1]

Abstract

The current lively discussion about climate change is forcing industries to rethink and to reformulate their strategies for long-term value creation. However, widely discussed information system concepts in this field like life-cycle assessment do not really meet the demands of these organizations. The objectives and the means of information systems must be realigned. We regard environmental management information systems as strategic risk assessment systems – with respect to the organization's domains of non-sustainability and the potential strategic risks that arise from that. The key idea of our approach is that the existing environmental management information system concepts can be utilized as core concepts of such a system. This perspective helps to clarify the role and demands on enterprise resource planning systems: relevant business objects and necessary extensions.

1. Introduction

For more than 10 years there has been research and development into IT systems for environmental protection. The main reason to develop and to use information systems focussing on environmental protection in a business context is to determine, monitor and limit the environmental impact of business activities (cf. Page, Rautenstrauch, 2001: 5). In practice there are two types of systems (Environmental Management Information Systems, EMIS): First, support systems which enable companies to comply with legal regulations and which thus directly influence operations (compliance driven EMIS). These systems are often integrated into enterprise resource planning systems (ERP systems) as modules under the term Environment, Health, and Safety (EH&S). Second, there are tools for analysing the contribution of products and services of a company to global environmental problems (eco-efficiency-oriented EMIS). These systems are based on concepts like life cycle assessment (LCA) or material flow analysis (cf. Haasis et al. 1995: 14). It has been shown that eco-efficiency-oriented EMIS can be technically integrated into ERP systems (e.g. Krcmar et al., 2000; Heubach, Lang-Koetz, 2005; Rautenstrauch, 2007; Grünwald, Marx, Gomez, 2007). However, eco-efficiency-oriented EMIS and their integration with ERP systems have not yet passed prototypical status, and eco-efficiency-oriented environmental management information systems are not widely diffused in companies.

The purpose of this paper is to give a concise but comprehensive presentation of a risk-oriented approach to environmental management information systems. We gather together conceptual elements from various sources and show which components of existing corporate IT systems, in particular ERP systems, should be included in the EMIS and what type of extensions are required. For most of the conceptual components, we formulate what we consider to be the ideal solution in terms of relevance and accuracy. We also present some hints concerning software technologies and interfaces intended to make the system feasible in practice.

[1] Faculty III Engineering & Environment, Leuphana Universty of Lueneburg,
e-mail: {funk|moeller|niemeyer}@uni-lueneburg.de, internet: http://www.leuphana.de

2. Corporate Sustainability Management as Strategic Risk Management

The non-sustainable use of natural resources and its effects on businesses and society as a whole is likely to create new requirements on information systems in industry. In the next few years we expect governments around the world to increase regulative pressure on companies acting in a non-sustainable manner. Conceptual answers to these challenges are material flow analysis and especially life-cycle assessment. LCA is focussed on global environmental problems and is a paradigm of how to deal with global environmental challenges. Starting points of this approach are possible corporate decisions, which are then assessed in terms of their negative global environmental impacts. LCA consists of two main modelling stages: the analysis of anthropogenic material and energy flows, with respect to the decision, and secondly the assessment of impacts of the resulting material and energy flows in the natural environment (e.g. climate change or ozone depletion). Different scientific methodologies are used to perform these steps. From a company's point of view, instruments like life-cycle assessment make sense only if sustainability is part of the organization's target system. Otherwise, the information output of LCA is irrelevant.

The anthropogenic material and energy flows can be divided into two parts: the supply chain the company is involved in (see figure 1, C1) and the surrounding pre-chains (e.g. allocation of resources and energy supply) and post-chains (e.g. use phase and waste disposal), see figure 1, C2. Data is not always available. In supply chains we can utilise computer-based supply chain management systems and ERP systems, in pre and post chain we have to employ external data sources.

Many companies assume that global environmental changes affect their business models and strategies for long-term value creation. But is life-cycle assessment as it stands the solution to providing strategic measures and indicators that will transform such expectations into rational strategic decision making? Is it necessary to integrate sustainability into the organisation's target system? Not really, because there are no direct relationships between non-sustainable decisions and the feed-back of global changes. For example, climate change is a strategic challenge in the tourist industry. Nevertheless, companies cannot avoid the negative consequences of climate change (more hurricanes, floods etc.) by reducing their own CO_2 emissions.

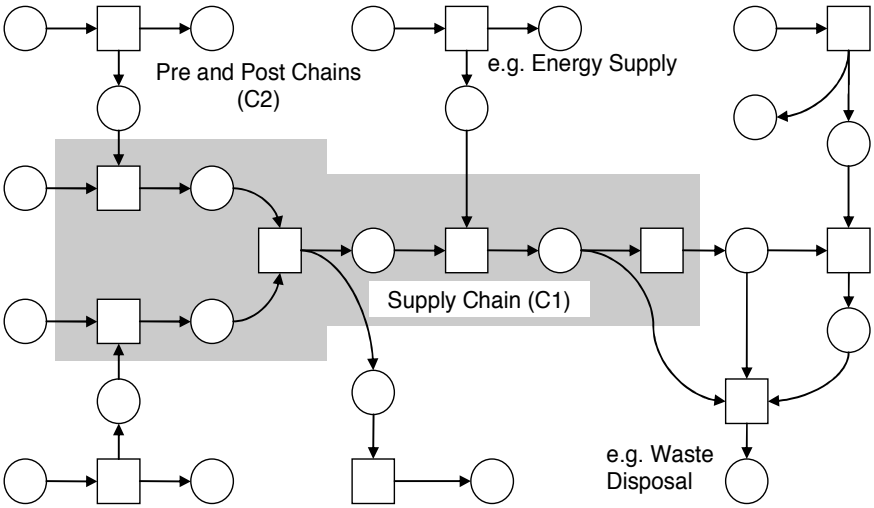

Figure 1: Supply chain and surrounding pre and post chains

Another example is automotive industry where the direct physical impacts of climate change are marginal; however, climate change is a serious strategic problem because the indirect impacts of climate change can affect their business models. The indirect feedbacks of non-sustainability of organisations result from new environmental laws, increasing eco taxes, emission trading concepts, maximum limits of resource consumption or bottom lines for eco-efficiency (e.g. in automotive industry regarding CO_2 emissions). These are "reactions of stakeholders" (Schaltegger et al., 2003: 197). Additional risks are imposed by increasing prices for raw materials and energy needed for production as well as for disposal of unwanted by-products. Schaltegger, Burritt and Petersen call this kind of risk an "environmentally induced company risk" (Schaltegger et al., 2003: 196): "An environmental risk becomes a company risk only if the environmental damage has economic consequences for business. Economic risks can result from direct physical contamination of land, property or equipment as well as from social risks and indirect market risks arising from stakeholder reactions to the environmental problem." If the company is not in compliance with the requirements defined by environmental law, government regulation will follow as a consequence and will also be a potential burden to economic development. If the requirements of e.g. the precautionary approach are not met, the state will set up a system of control as administrative regulation (Bell, McGillivray, 2006: 236). This means setting standards or specific policies in relation to e.g. waste issues. The establishment of the general (regulatory) policies could follow the idea of sustainable law. So, the mind-set of companies is likely to shift from being reputation driven to adopting an economic approach which requires answering the question of how companies can successfully manage the risks and challenges from global changes in the environment and their non-sustainability.

In addition to other environmental management information system (EMIS) images (cf. Haasis et al., 1995: 14), we propose the risk-oriented EMIS. In other words, we switch the perspective from decisions and the resulting environmental impacts to global changes and non-sustainability and strategic decision-making in organisations.

In the following we describe the conceptual information system architecture of a risk-oriented EMIS.

3. Conceptual Information System Architecture

There are two major hypotheses guiding the design of such a system. First, environmental management information systems will only be successfully applied in practice if they are integrated into enterprise resource planning systems (ERP systems). To achieve this we propose to introduce an additional perspective in material management which includes environmental impacts. These data will comprise indicators for the environmental damage which the material or product has so far caused in its life cycle as well as information enabling the system to assess future hazards and damages stemming from this material or product. Additionally, the consumption and source of energy will be allocated to materials and production processes in order to estimate environmental impacts as well as environmental risks. The implementation of this new environmental perspective in ERP material management will be based on conventional business objects such as material master data, material ledger and the relevant production processes.

Secondly, we propose that environmental management information systems – integrated in or based on ERP systems – should not only be part of financial and environmental management control systems but also a relevant part of strategic risk assessment. Future sustainability risks can only be forecast when the complete life cycle is analysed and when the system provides significant capabilities in the area of scenario-based simulation techniques. In other words, material flow analysis becomes a core component in sustainability-oriented strategic risk assessment.

Therefore, we distinguish three different system components: the ecological material ledger as a business application within the ERP system and as well as an object that can be exchanged between the ERP systems in the supply chain (component C1 in figure 1); a component (C2 in figure 1) that allows the pre and post chain to be added; a component that allows assessment of the impact in the natural environment

(see figure 1), on the basis of life-cycle impact assessment approaches; and finally the interface to the application context: strategic risk management and information-based strategy formulation.

3.1 Ecological Material Ledger

The Ecological Material Ledger (EML) is designed as an additional ERP component, complementing the Conventional Material Ledger of ERP Systems (CML). As owner of all information relevant for the computation of environmental impact, EML adds the ecological perspective to ERP Systems and serves as central data pool for environmental accounting and risk management. EML can be considered as a composite application to the central ERP components. The correlation between CML and EML is similar to the one between financial accounting and managerial accounting: most entities in EML refer to elements in CML while CML does not depend on EML data; CML and EML are loosely coupled and thus they might run on different platforms.

The EML consists of the following business objects (see figure 2): ecological material master data, ecological storage location, ecological material transformation, ecological material flow, and ecological derivation rules. All business objects but the derivation rules can be understood as vertical and horizontal extension of corresponding business objects of the conventional material ledger. [2]

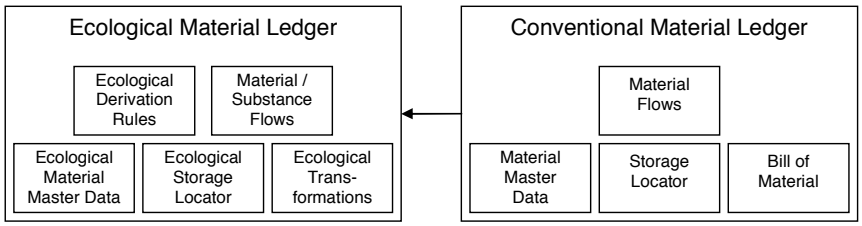

Figure 2: Business Objects of Ecological Material Ledger

The **Ecological Material Master Data (EMMD)** contains descriptions of all materials relevant for ecological aspects of the value chain. In the case of materials – also known to the conventional material ledger – these master data are just a reference to the CML, combined with some additional attributes describing the environmental impact (including future hazards) of the material. In general ecological materials are not necessarily physical materials. For example in the case of emissions the ecological material master describes materials which are not relevant in conventional material master. Thus any instance in conventional material master is referred by at least one instance in ecological material master. Note that two distinct materials in EMMD may refer to the same material in CML.

Ecological Storage Location (ESL) describes all locations in a company where (ecological) materials or substances can be stored. For all storage locations considered in the conventional material ledger, the ESL might contain additional information which is needed to determine the environmental impact (e.g. engery consumption). In addition locations are considered where materials like emissions are stored or disposed which are not subject to conventional material management.

Ecological Material Transformations (EMT) are general descriptions of all types of processes changing location or the state of any material position. In conventional material management such processes include production processes described by BOMs (bills of materials) as well as simple transforma-

[2] Following (Krcmar et al., 2000: 285) we call an extension vertical if it contains additional attributes. We call it horizontal if there are additional instances.

tions linke *goods receipt* and *goods issue*. Any ecological material transformation refers either to some conventional transformation or describes a process where and how ecological materials are generated, destroyed or transformed.

Ecological Material Flows (EMF) describe the changes (quantity or value) of ecological material positions. Each such flow contains a position date, refers to the ecological material position (defined by material and storage location) and refers to the ecological material transformation that caused the change. While every conventional material flow effects some ecological flow, not every ecological material flow is affected by some conventional flow. As every material flow contains a position date based on the set of ecological material flows every historical material position can be computed.

Ecological Derivation Rules (EDR) consists of rules enabling the derivation of all described ecological entities from corresponding conventional entities. That is:

- rules describing how to derive ecological material flows from conventional material flows,
- rules describing how to extend conventional bills of materials to ecological transformations,
- rules describing how to derive ecological material master data from conventional material master data.

As mentioned above EML strongly depends on the conventional material ledger and so must be informed about all transactions related to material master data and material positions. To do this the following services are offered by EML:

- *EMMDService*: this service has to be invoked at every change of instances in the conventional material ledger and is used to instantiate new ecological materials
- *ESLService*: this service has to be invoked at every change of storage locations in the conventional material ledger and is also invoked during production processes.
- *EMFService*: this service triggers computation and posting of ecological material flows. It has to be invoked every time flows in the conventional material ledger are posted or reversed.
- *EMTService*: this service provides EML with all BOM changes in the conventional material ledger. Depending on the derivation rules such changes might cause re-evaluations of ecological material positions.

3.2 Surrounding Pre and Post Chains

The ecological material ledgers are the core elements of a material and energy flow model of a supply chain. Nevertheless, such a model does not encompass all the stages of ecological life cycles. Consequently, missing data must be added, in particular data objects in pre chains and post chains.

Whereas within the supply chain the ERP systems serve as data provider, in the case of pre and post chains we have to identify other data sources. Fortunately, we are in the same situation as the life-cycle assessment community ten years ago. In the meantime, databases or so-called libraries with aggregated data set are available. The data set or modules describe the material and energy flows, associated with resource extraction, transport (air, land, and sea), energy supply, raw materials, operating resources, waste disposal, recycling etc. All computer-based life-cycle assessment and material flow analysis tools include such a database. Another prominent solution is EcoInvent in Switzerland (see Frischknecht, 2001; Frischknecht et al.; 2004). Several research institutes have compiled a database that covers to a large extent all relevant processes in Switzerland.

A software component that brings together ecological material ledgers and data sets from the process libraries can be implemented as a completely new ERP system component. Another solution is to upgrade existing material flow analysis tools, e.g. Umberto or Regis. Existing tools and components reduce the effort needed to implement the first prototype of a risk-oriented EMIS. The tools provide everything needed, including a network editor that helps to transform the ecological material ledgers into process speci-

fications and a model of the supply chain that makes it easy to add the missing pre and post chains; a valuation system editor that supports the specification of indicators (see below "Impact Assessment"); presentation components that visualise the networks (Sankey diagrams) and some indicators (charts, tables).

Nevertheless, the ultimate solution should be based on conceptual considerations. Is it easier to model the life-cycles and to perform the subsequent evaluations steps (impact assessment and strategic risk assessment, see below) using a flexible computer tool (following the tool perspective in computing science, see Möller et al. 2006)? Or is it better to automate these data processing steps and create a new ERP system component?

3.3 Impact Assessment

The modelling problems related to impact assessment in the natural environment are fairly well-known. The life-cycle impact assessment phase in life-cycle assessment provides a good methodological basis for such a component. However, in the context of risk management, corporate strategic decisions specify the information requirements, and life-cycle impact assessment does not cover all the requirements. In this context the underlying models of life-cycle impact assessment become a methodological toolbox and it is possible to choose the best fitting methods to fulfil the information requirements, e.g. concerning climate change (global warming potential), impending resource scarcity, critical burdens on the environment (eco points, see Schmidt 1997: 95). To comply with the information requirements of strategic risk management, additional indicators are required: eco-efficiency, resource efficiency, and energy efficiency indicators, hints to hazardous substances etc. (see e.g. Lang-Koetz, Heubach, 2007: 7).

So, an impact assessment component is not only a – hard-coded – data mapper from material and energy flows to well-known impact indicators, but also a modelling system that uses the life-cycle impact assessment methodologies as a model base. Prototypes of such a "valuation system editor" are on-hand (see Müller-Beilschmidt, 1997: 105; Möller, 2000: 193).

3.4 Strategic Risk Assessment

In conventional eco-efficiency oriented EMIS, impact assessment is the last phase in information processing. Corporate and risk-oriented EMIS require thinking about its integration into decision processes. How can risk-oriented EMIS support the formulation of strategies for long-term value creation? As mentioned above, there are at most marginal causal relationships between corporate (non-sustainable) decisions and feed-back. Organisations do not have to take responsibility directly for being non-sustainable. Therefore, the information system cannot be based on the analysis and assessment of material and energy flows only. Such a component is rather one of three modules of the whole information system. The other modules are:

- An information system about public sustainable development. How do public administration organisations transform laws, conventions, agreements etc. into realisable steps and decision? What are the expectations of other stakeholders? Such a module can be seen as an interface between global sustainability (with the goal of creating sustainable societies) and corporate sustainability (the "macro-micro link"). The main focus is directed at corporate non-sustainability.
- Another module refers to the decision context itself, i.e. the assessment of risks. "The assessment of risks results from a combined consideration of the goals, strengths and weaknesses of the business and known threats to that business from the environment as well as from the survey results. In the next step, various options to reduce risks are to be evaluated on the basis of their effectiveness and cost. This builds the basis for strategy choice and implementation…" (Schaltegger et al. 2003: 200). So, this component and therefore the whole risk-oriented EMIS

are focussed on strategic decisions and the formulation of strategies for long-term value creation. In particular the information system has to support existing and future business models with respect to sustainability or non-sustainability respectively. So, this module is not only the final step in data processing, it is also responsible for identifying required indicators and scenarios.

Figure 3 shows the resulting EMIS architecture. Despite the software solution for material flow analysis, the software support for the other modules should be implemented in the tool perspective, that is, the software should not destroy creativity and anticipatory behaviour. Rather, the software should facilitate scenario analyses, flexible consideration of new challenges and so on. From the decision maker's viewpoint, the system is a kind of a toolbox.

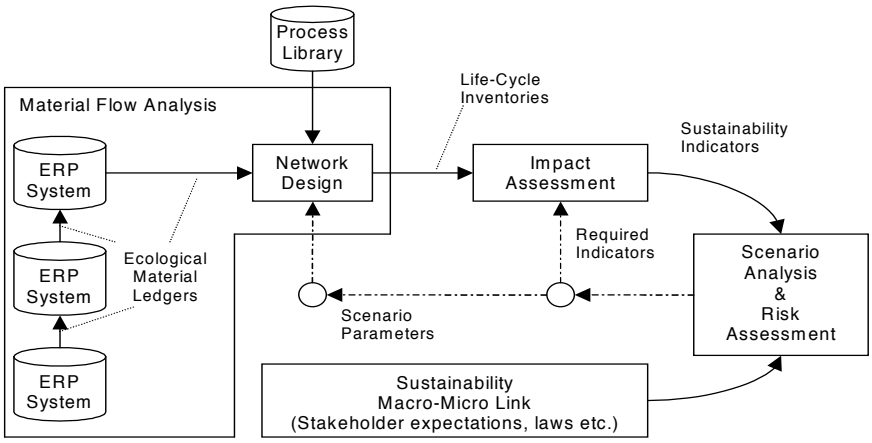

Figure 3: Conceptual Architecture of a risk-oriented EMIS

4. Conclusions

The purpose of this article is to outline a risk-oriented approach to environmental management information system research (risk-oriented EMIS). Furthermore we propose the integration of such an EMIS as a joint component of different ERP systems at each step of the value chain in order to provide the information needed to assess the risks and opportunities implied by global changes in the environment. So, the ERP systems in the supply chains serve as data sources of such an EMIS. As a result it is necessary to identify and to extend the relevant business objects. We call the resulting objects "ecological material ledgers". All ecological material ledgers in the supply chain allow assessment of the material and energy flow within the supply chain. Because supply chains do not cover the ecological life-cycles, additional processes must be added: pre and post chains. The resulting networks make it possible to calculate input/output balances and life-cycle inventory. The subsequent impact assessment models results in indicators about the sustainability or non-sustainability of the supply chain and the products and services respectively. Corporate decision makers can incorporate these strategic measures into their strategies for long-term value creation.

Nevertheless, the starting point is strategic risk assessment, and the question is what kind of data is required to support this, particularly with regard to corporate non-sustainability? What society considers being non-sustainability is a matter of an additional module in the information system, the macro-micro link.

Bibliography

Bell, S., Mc Gillivray, D. (2006): Environmental Law, 6. ed., Oxford, UK.

Frischknecht, R. (2001) Life cycle inventory modelling in the Swiss national database ECOINVENT 2000. In Hilti, L.M., Gilgen, P.W. (eds.) Sustainability in the Information Society, 15th International Symposium Informatics for Environmental Protection, ETH Zürich, Marburg, Germany.

Frischknecht R., Althaus H.-J., Doka, G., Dones, R., Heck T., Hellweg, S., Hischier, R., Jungbluth N., Nemecek, T., Rebitzer, G., Spielmann, M. (2004): Overview and Methodology - Final report ecoinvent 2000 No. 1, Swiss Centre for Life Cycle Inventories, Duebendorf, Switzerland.

Grünwald, C., Marx Gomez, J. (2007): Integrating Environmental Information with Systems of Factory Planning. In: Marx Gomez, J. et al. (eds.) Information Technologies in Environmental Engineering, ITEE 2007 – Third International ICSC Symposium, Berlin, Heidelberg, New York.

Haasis, H.-D., Hilty, L. M., Kürzl, H., Rautenstrauch, C. (1995): Anforderungen an Betriebliche Umweltinformationssysteme (BUIS). In: Haasis, H.-D., Hilty, L. M., Kürzl, H., Rautenstrauch, C.(eds.) Betriebliche Umweltinformationssysteme – Projekte und Perspektiven, Marburg, Germany (in German).

Heubach, D., Lang-Koetz, C. (2005): Einsatz von ERP-Systemen im Umweltcontrolling –Case Study und Umfrage zur IT-Unterstützung. In: Land, C. V., Rey, U. (eds.) Betriebliche Umweltinformations-systeme – Best Practice und neue Konzepte, Aachen, Germany (in German).

Krcmar, H. et al. (2000): Informationssysteme für das Umweltmanagement – Das Referenzmodell ECO-Integral, München, Wien (in German).

Lang-Koetz, C., Heubach, D. (2007): Umweltcontrolling umsetzen – Erstellung von Kennzahlen für Stoff- und Energieströme und deren Integration in die betriebliche IT (ein Leitfaden für produzierende Unternehmen), Fraunhofer IAO, Stuttgart, Germany (in German).

Möller, A., Prox, M., Viere, T. (2006): Computer Support for Environmental Management Accounting. In: Schaltegger, S., Bennett, M., Burritt, R. (eds.) Sustainability Accounting and Reporting, Dordrecht, Netherlands.

Möller, A. (2000): Grundlagen stoffstrombasierter Betrieblicher Umweltinformationssysteme, Bochum, Germany (in German).

Müller-Beilschmidt, P. (1997): Flexible Kennzahlensysteme mit dem “Valuation System Editor” . In: Schmidt, M., Häuslein, A. (eds.) Ökobilanzierung mit Computerunterstützung, Berlin, Heidelberg, New York (in German).

Page, B., Rautenstrauch, C. (2001): Environmental Informatics – Methods, Tools and Applications in Environmental Information Processing. In: Rautenstrauch, C., Patig, S. (eds.) Environmental Information Systems in Industry and Public Administration, Hershey, USA, Lodon, UK.

Rautenstrauch, C. (2007): Integration of MRP II and Material Flow Management Systems. In: Marx Gomez, J. et al. (eds.) Information Technologies in Environmental Engineering, ITEE 2007 – Third International ICSC Symposium, Berlin, Heidelberg, New York.

Schaltegger, S., Burritt, R., Petersen, H. (2003): An Introduction to Corporate Environmental Management, Striving for Sustainability, Sheffield, UK.

Schmidt, M. (1997): Möglichkeiten der Wirkungsanalyse und Bewertung von Sachbilanzen. In: Schmidt, M., Häuslein, A. (eds.) Ökobilanzierung mit Computerunterstützung, Berlin, Heidelberg, New York (in German).