EnviroInfo 2012: EnviroInfo Dessau 2012, Part 1: Core Application Areas

Greenhouse Gas inventory for Nghi Son Refinery and Petrochemical Complex Project

Vu Van Manh[1], Pham Tien Dung[2], Pham Thanh Van[3]

Abstract

To be known as one of the fastest developing countries on over the World, Viet Nam always identify focal points for its development, together with building National focal projects. Nghi Son Refinery and Petrochemical Complex Project (NSRP), the second Refinery in Viet Nam, is one of these focal projects. This project and other support buildings were designed following the standards which are stricter than National and International standards. During the construction and operation of the project, greenhouse gases such as CO_2, N_2O, HFCs, PFCs, CH_4 will be released to the air. The purpose of this article to calculate the volume of released greenhouse gases of this project in two periods: construction and operation. The authors also got result in building a greenhouse gas inventory database for which can be applied for other similar projects.

1. Introduction

In recent years, Vietnamese people's demand in fuel increases very fast, especially oil products. For satisfying this demand and for export, Vietnamese government has conducted building continuously the two oil refineries: Dung Quat oil refinery at Quang Ngai province (started operation in February, 2009) and Nghi Son Refinery and Petrochemical Complex Project (hereinafter referred to NSRP which was started building in May, 2008) at Nghi Son Economic Zone, Thanh Hoa province. As the original schedule, NSRP will be operated in 2013 and the output products together with Dung Quat oil refinery will provide 50% of fuel to be used in Viet Nam every year. The total area of this project is 653 ha (with 394 ha on terrestrial and 259 ha on the sea).

Viet Nam participated in the Kyoto Protocol at 03/12/1998 and ratified it at 25/9/2002. So, this country has the rights for a developing country in receiving financial supports and technology transfer from developed countries. Because of not including in the Annex I of Kyoto Protocol, Viet Nam doesn't have to reduce greenhouse gas emissions, but it has to make the national communication to the United Nations Framework Convention on Climate Change (UNFCCC), National greenhouse gas inventory, to build greenhouse gas reduction projects and methods for responding to climate change. Until now, the latest Vietnam national greenhouse gas inventory was done in 2000 following the 1996 IPCC Guidelines for National Greenhouse Gas Inventories and Good Practice Guidance for Land Use, Land-Use Change and Forestry with the 3 main greenhouse gases: CO_2, CH_4 and N_2O.

[1] VNU University of Science, 334 Nguyen Trai Street, Thanh Xuan District, Hanoi, Vietnam. Email: fesvvm@yahoo.com
[2] UNESCO Representative Office to Viet Nam, 23 Cao Ba Quat Street, Ba Dinh District, Hanoi, Viet Nam. Email: dzungpt3012@gmail.com
[3] Technische Universität München, Arcisstrasse 21, 80333 München, GERMANY. Email: thanhvan3007@gmail.com

Table 1
Viet Nam GHG inventory in 2000 by sector[4]

Sector	CO_2 (10^3 tonnes)	CH_4 (10^3 tonnes)	N_2O (10^3 tonnes)	CO_2e (10^3 tonnes)	Percentage (%)
Energy	45,900.00	308.56	1.27	52,773.46	35.0
Industrial processes	10,005.72	0.00	0.00	10,005.72	6.6
Agricultre	0.00	2,383.75	48.49	65,090.65	43.1
LULUCF	11,860.19	140.33	0.96	15,104.72	10.0
Waste	0.00	331.48	3.11	7,925.18	5.3
Total	**67,765.91**	**3,164.12**	**53.83**	**150,899.73**	**100**

The United Nations Office Greenhouse gas Calculator is a program which can help organizations, offices and buildings estimate their annual greenhouse gas emissions easily and accurately. This program, which combines tabs from a Microsoft® Excel file, is created base on the best available methodology for all emission sources within the minimum agreed boundary of the UN. So, for the objects which use this program for inventory, it will be more consistent and easier to compare.

The report target must provide as much data as possible on vehicles, machines using for working, energy used or generated and refrigerant air condition (RAC). When entering the data, the program will automatically calculate greenhouse gas emissions using default emission factors.

The program's method is based on 2006 IPCC Guidelines for National Greenhouse Gas Inventories of Intergovernmental Panel on Climate Change (IPCC). This program also encourages the report target to use its private emission factors, if any, but the report target must show how to get these factors. Until now, this program is only officially used by the UN in 2009 to estimate its sub-organizations' greenhouse gas emissions. By using the data collected at the construction period and the data forecasted at the operation period as input data and this program as the methodology, greenhouse gases emission/year for NSRP was estimated and database for later greenhouse gas inventories of this project was built as below.

2. Method

2.1 Determine Emission Sources

For each period of the project implementation, there are different emission sources. In the current construction period, the emission sources are: vehicles, machines which are used for levelling, purchased electricity and RAC. In the next construction period, the emission sources are: vehicles, machines which will be used for construction, purchased electricity and RAC. In the operation period, the emission sources are: vehicles which transport input and output materials, 19 chimneys and RAC.

2.2 Data Collection

This project is only at the levelling period until now. It was started levelling since May 2008 and after 3 years levelling, it was finished levelling with the main area for the refinery (328 ha) and the trunk line

[4] Viet Nam's second National communication to the United Nations Framework Convention on Climate Change.

pipeline area (30ha). By the field survey, only vehicles and machines data was available for this period. The data were taken from monthly reports from November 2009 – October 2010 (12 months).

Data collection by the project's Environmental Impact Assessment. In the next construction and the operation period, the available data is collected in the NSRP Environmental Impact Assessment.

2.3 Data Analysis

The UN Greenhouse gas calculator is applied for six emission sources as this table below:

Table 2
Six emission sources applied in UN GHG Calculator

No	Source	Scope		Greenhouse gas
1	UN-owned (or leased) vehicles	Direct emissions	1	CO_2, CH_4 and N_2O
2	Power generation			CO_2, CH_4 and N_2O
3	Refrigeration and air-conditioning equipment			HFCs and PFCs
4	Consumption of purchased electricity	Indirect emissions	2	CO_2
5	Purchased steam			CO_2, CH_4 and N_2O
6	Public transport	Indirect emissions	3	CO_2, CH_4 and N_2O

For the current construction period, the data available is the quantity of trucks, levellers, bulldozers, rollers and excavators by collecting in 12 monthly reports. The fuel used is diesel only.

Table 3
Number of vehicles, machines, engineers and workers worked
at the NSRP project from November, 2009 – October, 2010

No	Date	Truck	Excavator	Roller	Bulldozer	Leveller	Water truck	Engineer	Worker
1	11/2009	148	35	48	42	10	19	85	312
2	12/2009	148	35	48	42	10	19	85	312
3	01/2010	213	48	49	56	21	17	97	576
4	02/2010	265	46	51	49	13	13	95	634
5	03/2010	265	46	51	49	13	13	95	634
6	04/2010	305	49	53	55	14	14	95	634
7	05/2010	288	52	62	67	17	12	95	634
8	06/2010	190	52	54	57	14	25	95	634
9	07/2010	198	44	43	46	13	24	95	634
10	08/2010	79	18	13	19	6	13	67	306
11	09/2010	79	11	16	18	7	13	87	233
12	10/2010	126	28	34	37	7	7	78	424
Average		**192**	**39**	**44**	**45**	**13**	**16**	**90**	**498**

The vehicles and machines above were then classified in 3 groups as the calculator's requirement: Van pickup trucks (include trucks), light duty vehicles (levellers), heavy duty vehicles (bulldozers, rollers and excavators). And then, by applying the Circular No. 06/2005/TT-BXD: "Guiding the method of elaborating construction machine and equipment shift prices" published by the Viet Nam Ministry of Construction in April 15, 2005; the fuel used/year was estimated for each group.

Table 4
Total fuel consumed/year by vehicles and machines in the current construction period

Vehicles/Machines	Truck	Excavator	Roller	Bulldozer	Leveller	Water truck
Fuel type	Diesel					
Number	192	39	44	45	13	16
Working day/year	300	300	230	250	210	220
Default fuel used/day (litre)	75.60	163.71	40.32	93.60	75.00	27.00
Total fuel used/year (litre)	**4,354,560.00**	**1,915,407.00**	**408,038.40**	**1,053,000.00**	**204,750.00**	**95,040.00**

For the next construction period, data available is quantity of vehicles and machines and the consumed fuel collected in the NRSP Environmental Impact Assessment (EIA). The fuel used is diesel. The EIA provided the estimated data for the whole construction (515 days). Consider the project is constructed 300 days/year, the consumed fuel/year is estimated as below:

Table 5
Total fuel used by terrestrial vehicles/machines in the next construction period of NSRP project

No	Vehicles/machines	Number	Fuel type	Density	Fuel used in this period (515 days)	Fuel used in one year (300 days)	Fuel used in one year (300 days)
				(tonnes /m^3)	(tonnes)	(tonnes)	(litre)
1	Crane	40	Diesel	0.85	3,152.00	1,836.12	2,160,137.06
2	Bus	122			4,340.00	2,528.16	2,974,300.40
3	Heavy duty vehicles	40			2,846.00	1,657.86	1,950,428.33
4	Trucks	284			17,178.00	10,006.60	11,772,472.87
5	Passenger car	100			1,581.00	920.97	1,083,495.15
Total							**19,940,833.81**

Table 6
Total fuel used by vehicles/machines working on the sea in the next construction period

No	Vehicles/ machines	Number	Fuel type	Density	Fuel used in this period (515 days)	Fuel used in one year (300 days)	Fuel used in one year (300 days)
				(tonnes/m^3)	(tonnes)	(tonnes)	(litre)
1	Crane	4	Diesel	0.85	315.00	183.50	215,876.64
2	Bus	12			434.00	252.82	297,430.04
3	Heavy duty vehicles	4			285.00	166.02	195,316.96
4	Trucks	28			1,718.00	1,000.78	1,177,384.35
5	Passenger car	10			158.00	92.04	108,280.98
Total							**1,994,288.98**

Table 7
Total fuel used by ship in constructing crude oil pipes

No	Vehicles/machines	Fuel type	Density	Fuel used in this period (515 days)	Fuel used in one year (300 days)	Fuel used in one year (300 days)
			(tonnes/ m^3)	(tonnes)	(tonnes)	(litre)
1	Pipe-putting ship	Diesel	0.85	5,616.00	5,400.00	6,352,941.18
2	Pull ship			265.00	254.81	299,773.76
3	Service ship			53.00	50.96	59,954.75
4	Pipe-transporting ship			265.00	254.81	299,773.76
Total						**7,012,443.44**

The vehicles and machines above were then separated in 3 groups as the calculator's requirement. For the operation period, data available is amount of input fuel consumed in one day collected in the NRSP EIA. By operating in 345 days/year, the consumed fuel in one year is estimated as below:

Table 8
Total consumed fuel for the operation period of NRSP project

No	Fuel type	Total consumed fuel /day (tonnes)	Total consumed fuel /year (tonnes)
1	Gas	1,242.00	428,490.00
2	LPG to gas turbin	555.00	191,475.00
3	LPG to air turbin	115.00	39,675.00
4	Oil	1,003.00	346,035.00
5	Crude oil	637.00	219,765.00

After analyzing the data to meet the UN Greenhouse gas calculator's requirements, the calculator was used to estimate the green house gas emissions for each period of NSRP project.

For calculating greenhouse gas emissions using the fuel data consumed by vehicles as available on the two construction periods, the program uses this formula:

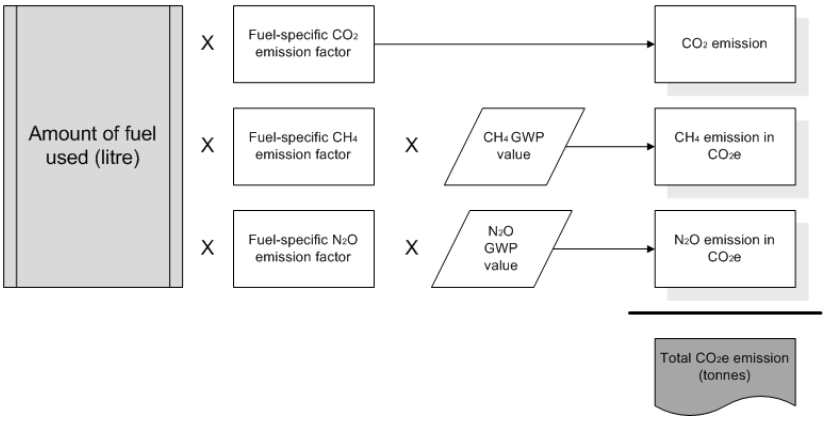

For calculating greenhouse gas emissions using the fuel data consumed by the project's operation in the operation period, the program uses this formula:

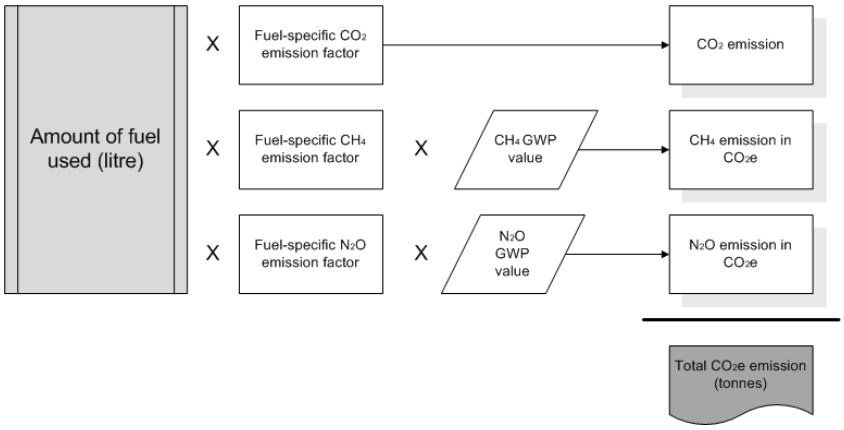

Global Warming Potential (GWP) value is the ratio of radiative forcing that would result from the emission of one unit of a given GHG compared to one unit of carbon dioxide (CO_2).

Emission Factor: GHG emissions expressed on a per unit activity basis. For example, metric tons of CO_2 emitted per million Btus of coal combusted or metric tons of CO_2 emitted per kWh of electricity consumed.

3. Results and Discussion

3.1 Database for NSRP's Greenhouse Gas Inventory

Database for NSRP's greenhouse gas inventory is three excel files for three periods. Each file combine a series of tabs with input data fill in each tab depend on how status it is. These tabs are:

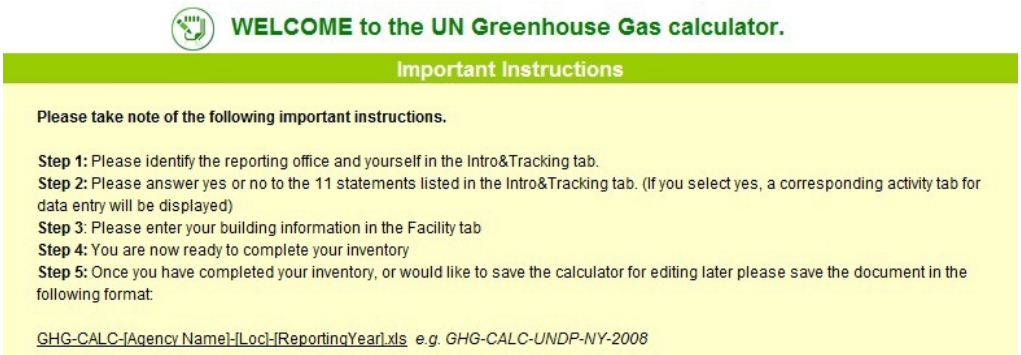

Figure 1
Important instruction tab demonstrates how to use this program

Intro & tracking tab: provides the NSRP's information and the reporter's information. And in this tab, the emission sources for each period must be identified. After each source identified, the correspondent tab will appear. For example, there is only data on fuel consumed in operation period, so at the row "The reporting office has its own equipment for power generation", option "yes" must be selected and then, the Power Generation tab appears. For other rows, option "no" are chosen.

There are two key actions to make the tool work: 1. Please describe the buildings to be included in the facility tab. You will find the facility tab at the bottom of this page. 2. Please identify the emission sources relevant to the organization. The emission sources are identified by answering yes to the below questions. Once an emission source is identified, a tab for activity data will appear.

	Select	CO_2e Emissions (tonnes)
The reporting office owns or leases vehicles for official travels	No	
The reporting office uses public road transport for official travel	No	
The reporting office's energy supply is purchased from an electricity supplier	No	
The reporting office's energy supply is purchased from a steam/heat supplier. CO2, CH4 and N2O emission factors (kg/KWh steam) should be available from the CHP supplier.	No	
The reporting office's energy supply is purchased from a steam/heat supplier. Activity data on the supplier's total fuel consumption (tonne), steam production (kWh) and electricity production (kWh) should be available from the CHP supplier.	No	
The reporting office has its own equipment for power generation.	Yes	3856377.3
The reporting office makes use of air conditioners/refrigerants. The equipment is maintained by the reporting office.	No	
The reporting office makes use of air conditioners/refrigerants. The equipment is maintained by a contractor.	No	
The reporting office makes use of air conditioners/refrigerants. Initial screening of potential GHG emissions.	No	
The reporting office would like to report on additional optional emission sources.	No	
The reporting office would like to provide further information about the data collection process.	No	

Figure 2
Intro&tracking tab with filled data for the operation period

Summary tab: demonstrates the project's information, the reporter's information and the final results in four ways: Greenhouse gas (GHG) inventory in metric tonnes, Greenhouse gas inventory in tonnes CO_2 equivalents, GHG emissions by number of personnel and GHG emissions by area of office space.

Greenhouse Gas Inventory in tonnes CO2 Equivalents		CO_2	CH_4	N_2O	HFCs	PFCs	CFC/HCFCs	CO_2e
		tonne	tonne	tonne	tonne	tonne	tonne	tonne
	Emissions from UN owned or leased equipment							
	Vehicles	0	0	0				0
	Power generation	3839167.393	8947.2813	8262.6533				3856377.3
	Refrigeration and Air-Conditioning (RAC)				0	0		0
	Emission from purchased energy							
	Purchased electricity	0	0	0				0
	Purchased heat/steam	0	0	0				0
	Emissions from public transport							
	Passenger trains and buses	0	0	0				0
	Biomass CO_2 emissions	0						
	Optional emissions	0	0	0	0	0	0	0

Figure 3
Summary tab demonstrates the final result in tonnes CO_2 Equivalent of the operation period

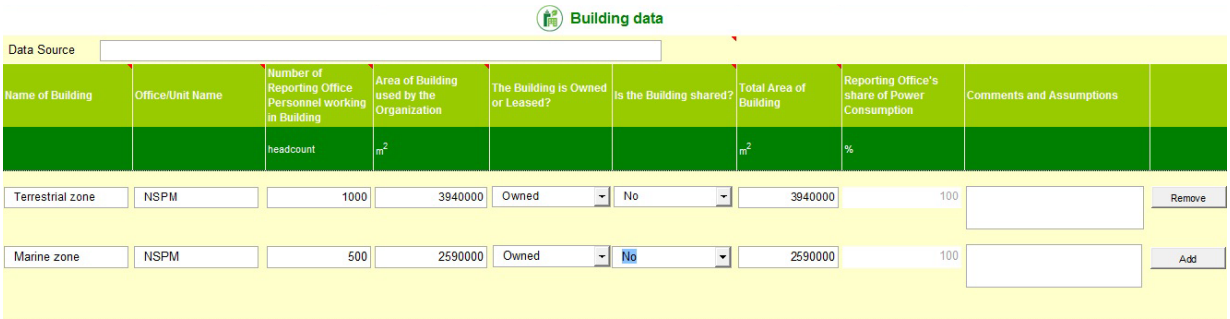

Building data

Data Source

Name of Building	Office/Unit Name	Number of Reporting Office Personnel working in Building	Area of Building used by the Organization	The Building is Owned or Leased?	Is the Building shared?	Total Area of Building	Reporting Office's share of Power Consumption	Comments and Assumptions	
		headcount	m^2			m^2	%		
Terrestrial zone	NSPM	1000	3940000	Owned	No	3940000	100		Remove
Marine zone	NSPM	500	2590000	Owned	No	2590000	100		Add

Figure 4
Facility tab with filled data for the operation period

Facility tab: provides space for filling in the number of personnel working on this project and area of building using by the organization.

Vehicles tab: only available if the option "yes" were chosen in the row "The reporting office owns or leases vehicles for official travels" of Intro & tracking tab. This only happened in the two construction periods. In this tab, amount of fuel (diesel) used by each type of vehicles was needed. Click "Add" to add more row of type of vehicles.

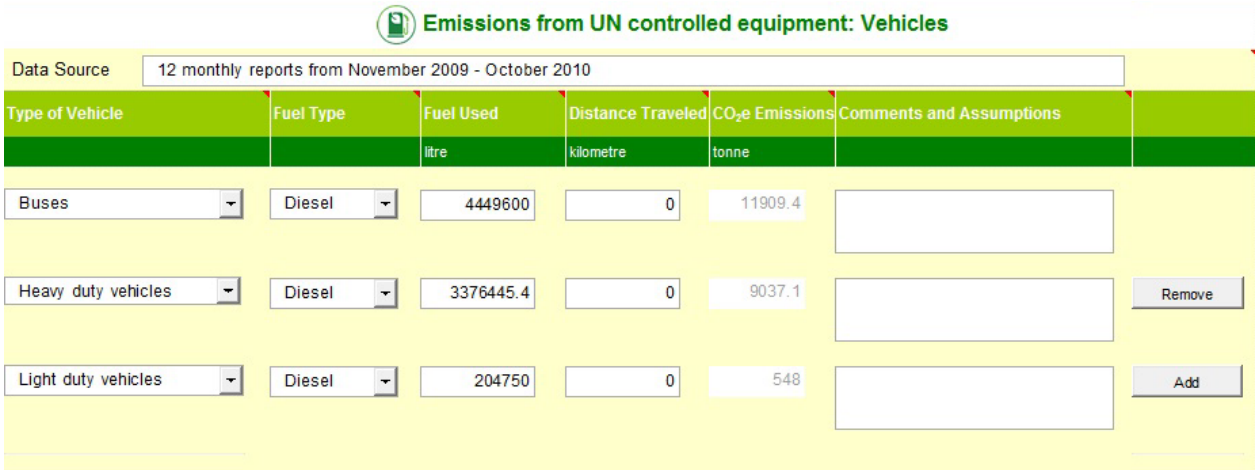

Emissions from UN controlled equipment: Vehicles

Data Source 12 monthly reports from November 2009 - October 2010

Type of Vehicle	Fuel Type	Fuel Used	Distance Traveled	CO_2e Emissions	Comments and Assumptions	
		litre	kilometre	tonne		
Buses	Diesel	4449600	0	11909.4		
Heavy duty vehicles	Diesel	3376445.4	0	9037.1		Remove
Light duty vehicles	Diesel	204750	0	548		Add

Figure 5
Vehicles tab with filled data for the constructed period

Power Generation tab: only available if the option "yes" were chosen in the row "The reporting office has its own equipment for power generation" of Intro&tracking tab. This only happened in the operation period. In this tab, amount of fuel (diesel) consumed was needed.

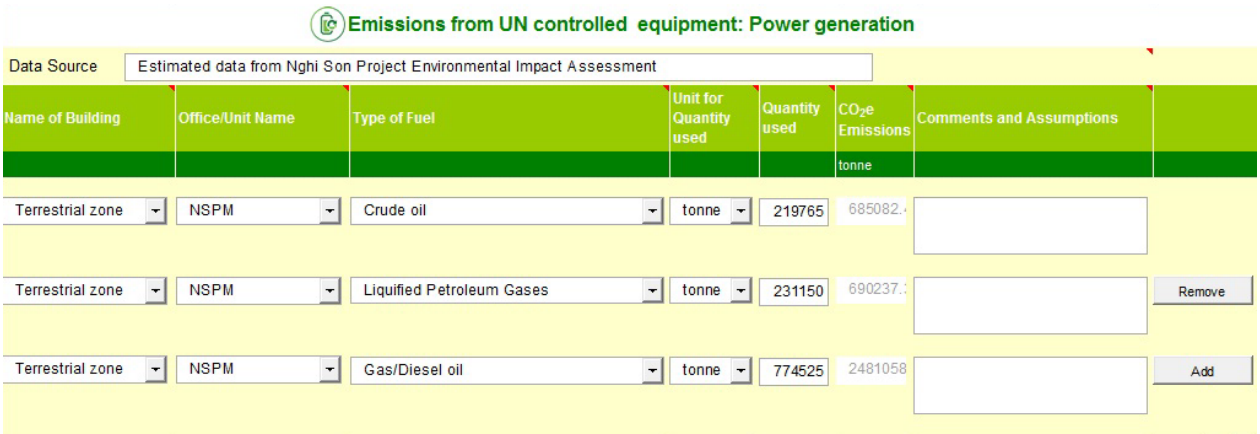

Emissions from UN controlled equipment: Power generation

Data Source: Estimated data from Nghi Son Project Environmental Impact Assessment

Name of Building	Office/Unit Name	Type of Fuel	Unit for Quantity used	Quantity used	CO_2e Emissions (tonne)	Comments and Assumptions	
Terrestrial zone	NSPM	Crude oil	tonne	219765	685082.		
Terrestrial zone	NSPM	Liquified Petroleum Gases	tonne	231150	690237.		Remove
Terrestrial zone	NSPM	Gas/Diesel oil	tonne	774525	2481058		Add

Figure 6
Power Generation tab with filled data for the operation period

Other tabs: purchased steam, purchased electricity, RAC, etc aren't mentioned here because there is no available data for them in the three periods of this project. But they are needed for later inventory with more efficient data.

3.2 Inventory Results for NSRP Project

After finish filling in the data for each period of NSRP project, the greenhouse gas emissions will be estimated. The result for each period is present below:

3.2.1 Current Construction Period

Table 9
Total greenhouse gas emission in one year of current construction period of NSRP project

Vehicles and machines	Amount	Total fuel used/year	Total CO_2e emission (tonnes)
Van Pickup trucks	208	4,449,600.00	11,909.4
Heavy duty vehicles	128	3,376,445.40	9,037.1
Light duty vehicles	13	204,750.00	548.0
Total CO_2e emission			**21,494.5**

So, in one year of the current construction period, the total greenhouse gas emission is 21,494.36 tonnes CO_2e

3.2.2 Next Construction Period

Table 10
Total greenhouse gas emission in one year of current construction period of NSRP project

Vehicles and machines	Amount	Total fuel used/year	Total CO_2e emission (tonnes)
Van Pickup trucks	312	12,949,857.22	34,660.4
Heavy duty vehicles	88	11,534,202.43	30,871.4
Bus	134	3,271,73044	8,756.8
Passenger car	110	1,191,776.13	3,189.8
Total CO_2e emission			**77,478.4**

So, in one year of the next construction period, the total greenhouse gas emission is 77,478.4 tonnes CO_2e

3.2.3 Operation Construction Period

Table 11
Total greenhouse gas emission in one year of current construction period of NSRP project

No	Fuel type	Total fuel consumed/year (litre)	CO_2e emission (tonnes)
1	Gas/Diesel	774,525.00	685,082.00
2	LPG	231,150.00	690,237.00
3	Crude oil	219,765.00	2,481,058.00
4	**Total CO_2e emission**		**3,856,377.00**

In one year of the next construction period, the total GHGs emission is 3,856,377.00 tones CO_2e. By comparing the results of three periods, we can see that the emission in the operation period (3,856,377.00 tonnes CO_2e) is much higher than the two construction periods. It can be understood by the high volume of input fuel for the operation period. That's why the emissions/personnel in the operation period is the most. In the operation period, the greenhouse gas emissions must be constant every year. So, in later greenhouse gases emissions inventories, NSRP project can use the result here for the operation period to be the demo result and it can make the comparison between years to help control the greenhouse gas emission.

4. Conclusion

The GHG inventory database was created adaptively to the NSRP project and can be used for later inventories of this project. For more exact result, the NSRP project should collect more sufficient data, especially the RAC data and the consumed electricity data. This method is a good way for the project to monitor its annual fuel consumed as well as GHG emissions. So the management board can realize the changes between estimated data and real data. After comparing the 2 data types, the management board should find the solution to release the minimum GHG emissions to environment.

The emission factors applied here are the default emission factors. For better result of the GHG inventory, Vietnam needs to build its own emission factors.

UN Greenhouse Gas Calculator was translated to Vietnamese and can be used for other organizations, projects or offices to estimate their GHG emissions themselves. Their GHG emission reports will contribute to Vietnam National GHGs inventory.

Bibliography

NSRP project management board (2009): NSRP project Environmental Impact Assessment

PetroVietnam Construction JSC (2009-2010): Monthly reports from Nov 2009 – Oct 2010

United Nations Environmental Program (2009): United Nations Office Greenhouse Gas Calculator manual

United Nations Environmental Program (2010): The UN system's footprint and efforts to reduce it.

Viet Nam Ministry of Natural Resources and Environment (2010): Viet Nam's second national communication to the United Nations Framework Convention on Climate Change

Viet Nam Ministry of Construction (2005): Circular No. 06/2005/TT-BXD: "Guiding the method of elaborating construction machine and equipment shift prices"

World Resources Institutes (2004): The Greenhouse Gas Protocol